International Journal of
Science and Engineering Investigations vol. 4, issue 38, March 2015
ISSN: 2251-8843

Generation of Spatially Varying Ground Motion Based on Response Spectrum using Artificial Neural Networks

Hosein Ghaffarzadeh
Department of Structural Engineering, University of Tabriz, Tabriz, Iran
(ghaffar@tabrizu.ac.ir)

Abstract- During an earthquake, the motion of the ground spatially changes, in both amplitude and phase. The spatial variation of seismic ground motions has an important effect on the response of large structures such as bridges and dams. To be able to simulate seismic ground motions which vary in space, a representing spatial variability model is required. Data collected from closely spaced arrays of seismographs such as SMART-1 array in Loting, Taiwan have enabled researchers to produce useful spatial variability models to model spatial excitation.

In this paper a simulation technique for the generation of artificial spatially variable seismic ground motions was presented using Arterial Neural Networks (ANNs). A simplified neural network based procedure was used to generate artificial spatial varying accelerograms from the response spectrum of an earthquake.

Keywords- *Neural Network, Artificial Spatial Varying Earthquake, Response Spectra*

I. INTRODUCTION

In the seismic response analysis of structures it is assumed that the supports to be subjected to uniform base excitation. This assumption may not be realistic for structures especially whose horizontal dimensions are comparable to the wavelength of foundation ground motion. The earthquake waves travelling through the ground thus enforce differential motion on structural supports. This is due to the fact that the earthquake waves received by different structural supports are not uniform and change in amplitude and frequency away from their source. A great deal of research has been directed at studying the spatial variation of ground motion [1,2]. The main efforts have been concentrated on defining an appropriate ground motion attenuation model to model spatially varying effects.

The importance of spatially varying support excitation on structural response has long been realised. Harichandran and Vanmark [1] carried out a preliminary study on the recurrence of earthquakes in SMART-1 array. They considered the ground motion as a random process and obtained a spectral equation to be used in spectral analysis of multi-support excitation problems. As a practical example, Harichandran and Wang [3] investigated the effects of a wave passing through the supports of a simply supported beam. They used a semi-experimental random model and conducted probabilistic analyses of that problem. Perotti [4] used the theory of random vibration to study the effects of non-uniform ground excitation on large structures. Nazmy and Abdel-ghaffar [5] carried out dynamic analysis of a cable-stayed bridge under non-uniform ground excitation. They, however, applied four different accelerograms of El-Centro earthquake, recorded in different locations to the different piers of the bridge. In the same year, Der Kuireghian and Neuenhofer [6] presented a new spectral approach to analyse MDOF systems to different support excitations. In their method, they included variations of the ground motion due to wave passage, loss of coherency with distance and variation of local soil conditions. Kahan et al [7] extended the spectral analysis carried out by Der Kiureghian and Neuenhofer and investigated the effects of support distance on the response of bridges. Seismic response of large structures such as bridge and dam subjected to asynchronous and non-uniform support excitation investigated by Maheri and Ghaffarzadeh [8]. Their results showed that asynchrony and non-uniformity in ground motion may, in some cases, amplify the seismic response and therefore should be considered in the analysis.

Simulation techniques for generating random processes have enabled researches to generate such random processes as seismic events. Shinozuka used the concept of representation of Gaussian random processes to generate simulations of random process [9]. He based his simulations on the spectral representation method in which simulations of zero mean, Gaussian random processes are obtained by adding up a large number of weighted trigonometric functions. The computational time required for simulation was however inhibiting. Yang [10] reduced the computational time for simulation by introducing the Fast Fourier Transform (FFT) technique. Shinozuka later adopted Yang's FFT technique to further his work on simulation of multi-variate and multi-dimensional random fields [11]. The simulations generated by FFT are however not ergodic in the mean and to obtain ergodicity the value of the field spectrum at the origin should be assumed zero. Zerva [12] overcame this problem by combining Shinozuka's original approach of using trigonometric series with FFT.

Data collected from closely spaced arrays of seismographs such as SMART-1 array in Loting, Taiwan have enabled researchers to study spatial variability phenomenon [2,13,14]. The SMART-1 array consisted of 37 force-balanced triaxial accelerometers arranged on three concentric circles (the inner denoted by I, the middle by M, and the outer by O). Twelve equi-spaced stations, numbered 1-12, were located on each ring, and station C00 was located at the center of the array.

Artificial neural network models have been widely applied to various relevant engineering areas. Several authors have used ANN in the earthquake engineering. Ghaboussi and Lin [15] proposed a new method of generating artificial earthquake accelerograms using neural networks. Lee and Han [16] developed efficient neural-network-based models for the generation of artificial earthquake and response spectra. They constructed several ANN to predict Earthquake parameters of an area.

According to powerful ability of the artificial neural networks to model engineering problems, in this article, a ANN based method was proposed to generate artificial spatially varying earthquake accelerograms. Pseudo response spectrum of earthquake events in SMART-1 array was used to simulate such accelerograms.

II. ARTIFICIAL NEURAL NETWORK

An Artificial neural network is a computational model that is loosely based on the neuron cell structure of the biological nervous system. The biological brain consists of billions of highly interconnected neurons forming a neural network. Human information processing depends on this connection system of nervous cells. Based on this advantage of information processing, neural networks can easily exploit the massively parallel local processing and distributed storage properties in the brain. The origin of neural networks dates back to the 1940s which McCulloch and Pitts and Hebb [17] researched networks of simple computing devices that could model neurological activity and learning within these networks, respectively.

Neural networks are simply assemblage of human brain. They consist of some nodes or neurons interconnected with each other. Information propagates through connection and the strength of the transmitted information depends on the numerical weights which are assigned to the connections. Each neuron receives information along the incoming connection, performs some simple operations, such as calculating weighted sum of the incoming information and calculating an activation function, and sends information along its outgoing connections. The knowledge learned by a neural network is stored in its connection weights. The learning taking place, when a learning method is used to modify the connection weights in such a way that a given input pattern produces a given output pattern. The patterns used in training the neural network are called the training set. During the training, a neural network acquires the knowledge from the input-output pairs in the training set, and stores that knowledge in its connection weights. Figure 2 shows a general configuration of a neural network.

III. NEURAL NETWORK BASED METHOD FOR GENERATING EARTHQUAKE

In this study, ANN was used to produce artificial earthquake accelerograms which spatially varied through traveling underneath a large structure such as bridge and dam. The generated accelerograms can be used for multiple support excitations analysis of this kind of structures. The proposed method based on producing earthquake accelerograms from a specified response spectrum.

An ANN is constructed using accelerograms as output data set and corresponding pseudo-velocity response spectra as input information. Such a neural network will be trained with the response spectra and accelegrams of a number of actual earthquakes selected from SMART-1 array to produce spatially varying ground motion. Since in discretizing the earthquake accelegram a reasonable accuracy should be maintained, it is discretized with a large number of discrete values. Consequently, the resulting network will be very large and very difficult to train. To overcome this problem, another preprocessing neural network is used. The preprocessing neural network learns to reduce the size of input vector to enhance main neural network. Based on special characteristic of hierarchical neural network in lossless compressing and decompressing of information, the neural network architecture is assigned and prepared to compress accelerogram vectors.

A. Replicator Neural Network

The hierarchical neural network is a multilayer neural network which can reduce dimension of input data. A neural net architecture suitable for solving the data compression problem is shown in figure 1. This neural network is composed of a large input layer feeding into a small hidden layer, which then feeds into a large output layer. Due to replicating of input vector in the output layer of the neural network, it can refer to replicator neural network.

As mentioned in previous section, the purpose of using replicator neural network is to compress and reduce the dimension of accelerogram vectors to use of them in next stage. 180 earthquake accelerograms collected from SMART-1 array was considered as a training data set for the replicator neural network. Feed-forward back propagation method was employed to train the neural network.

The trained replicator neural network was then tested by presenting new accelerograms of SMART-1 array as input and comparing them with the neural network replicated accelerograms. A typical comparison for one of the accelerograms from the testing set is shown in Figure 2. It can be seen that the replicator neural networks have learnt to generate an accelerogram which is very close to the input accelerogram.

After successful training of replicator neural network, the connection weights were saved to use them to compress and decompress of the presenting accelerograms of the main neural network in coming stage. For this purpose the replicator neural network is split to compressing and decompressing half parts in which by propagating a accelerogram vector in first half, it compress and vice versa right.

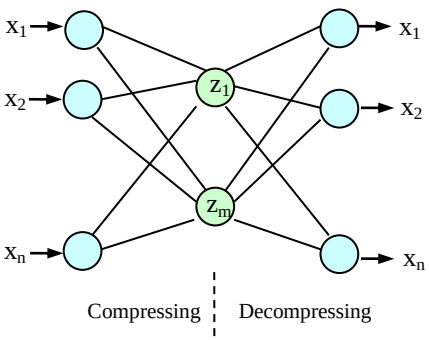

Figure 1. Demonstration of Replicator neural network architecture

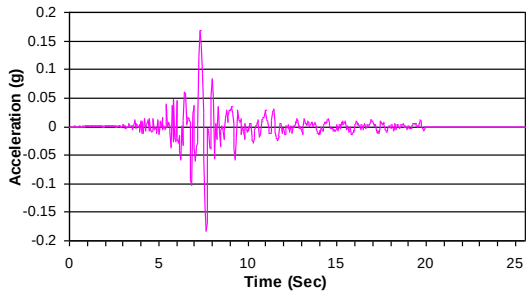

(a)

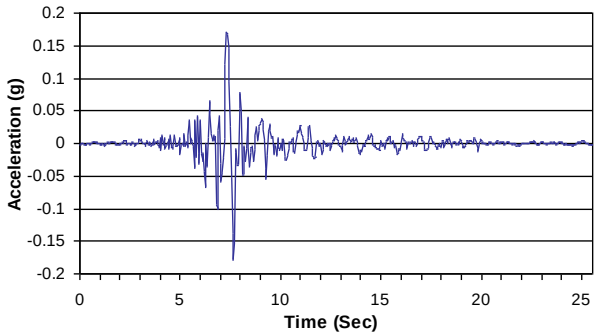

(b)

Figure 2. Event recorded accelerogram at the station: (a) Sample input accelerogram for testing of replicator neural network, (b) Replicated accelerogram

B. Generalized Regression Neural Network for Spatially Varying Accelerograms Generation

Generalized Regression Neural Network (GRNN) is a probabilistic neural network has been proposed by Specht [18]. GRNN has a radial basis layer and a special linear layer which powered it for function approximation and mapping problems. Figure 3 shows the schematic architecture of a GRNN. It approximates any arbitrary function between input and output vectors without any iterative training procedure as in back propagation method.

In this study, GRNN has been employed to generate artificial accelerograms based on seismic response spectra. The accelerogram generator neural network is developed to learn to generate the accelerogram from the vector of the pseudo-velocity response spectrum at discrete periods. To avoid of large size of neural network because of large dimension of accelerogarm vectors, generation was performed in two stages as shown in figure 4. Two neural networks were constructed to generate accelerograms. The first neural network is a GRNN and the second one is the second half part of the replicator neural network as trained previously.

Input vector of the GRNN was composed of descritized pseudo-velocity response spectrum and distance in which the varying spatial accelerogarm is generated. The compressed representation of accelegorams which obtained from the first half part of replicator neural network was considered as output vector of the GRNN. The output vector of the GRNN was propagated to the second half part of trained replicator neural network.

240 earthquake accelerogarms recorded from event 20, 25, 39, 40, 43 and 45 at specified distance of SMART-1 Array, according to the distance of the rings, I,M and O with each other, were used to train the neural network. Each accelerogarm vector was compressed to a vector with the size of 80, using the replicator neural network as described, previously. Pseudo-velocity response spectrum of each acceleroram was also descritized at 80 sample period.

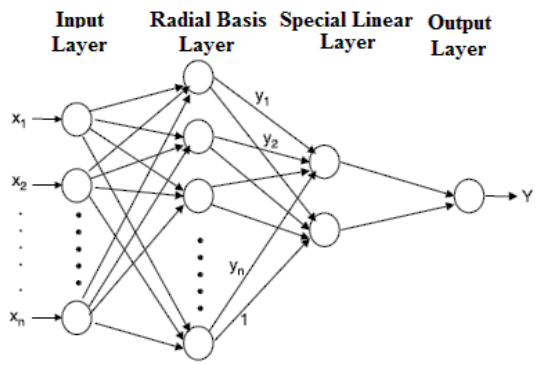

Figure 3. Schematic Diagram of a GRNN architecture

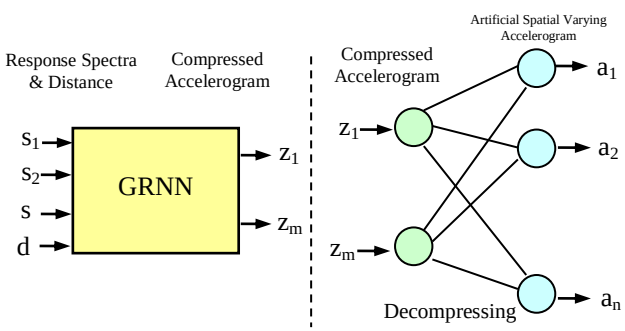

Figure 4. Artificial spatial varying accelerogram procedure

Input layer of first neural network consists of 81 neurons, 80 neurons for presenting pseudo-velocity response spectrum and one neuron for distance in which the varying spatial accelerogarm is generated. Output layer also consists of 80 neurons to present compressed accelerogram vectors. The

GRNN was trained by 240 compressed accelerograms and their corresponding pseudo response spectra. As a sample input for the GRNN, the recorded accelerogram of event 25 at the center of the SMART-1 array in station C00 and its pseudo velocity spectrum were illustrated in figure 5.

After training of the GRNN by propagating training data set, the network was tested for new data set. Results showed that the neural network has good generalizing power. To generate spatially varying accelerograms, a pseudo velocity spectrum and a distance in which generated accelerogram is desired, were presented to the neural network as input data. By propagating data in the neural network, the accelerogram in the specified distance was generated.

Pseudo velocity spectrum of E-W component of event 25, recorded at the station I01 was considered with various distance of 300, 500, 1000 and 1500m as testing data set. Figure 6 shows the variation of the pseudo velocity of a system with single degree of freedom versus the period. After running the neural network, the relating accelerorams were generated. The simulated accelerorams have been shown in figure 7. The results are comparable with the recorded accelerograms in the adjacent stations with similar distance. It can be seen that by increasing distance from the center of the SMART-1 array, accelerograms modify and acceleration values tend to diminish. The time shifting of peak acceleration in the accelerograms can be also observed in the results.

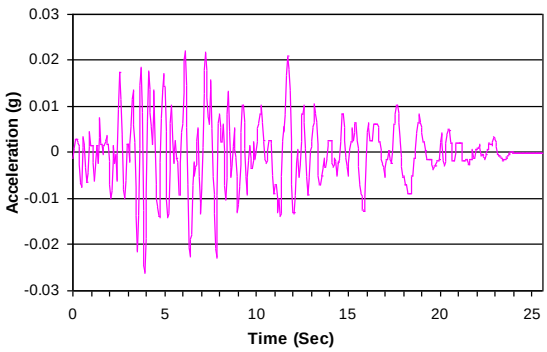

(a)

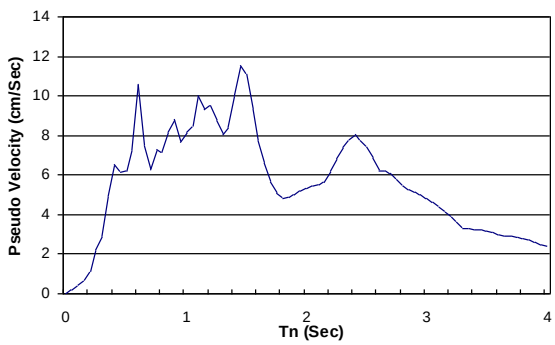

(b)

Figure 5. Sample input for the GRNN: a) N-S component Accelerogram of event 25 in station C00, b) 5% damping pseudo velocity spectrum

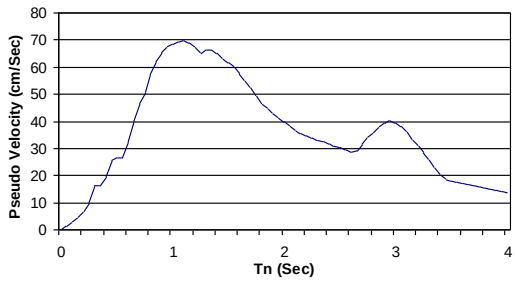

Figure 6. Input pseudo velocity of E-W component of event 25 at station I01 for generation of accelerograms.

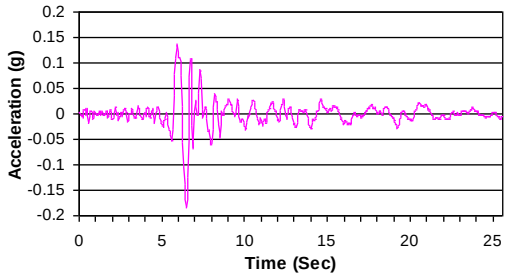

(a)

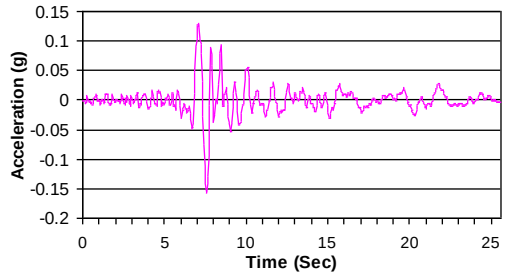

(b)

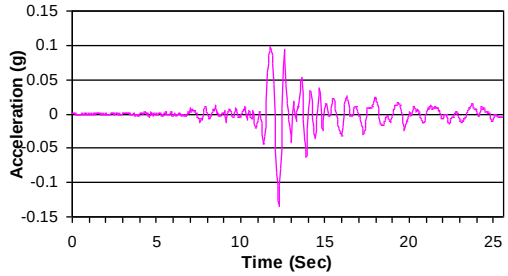

(c)

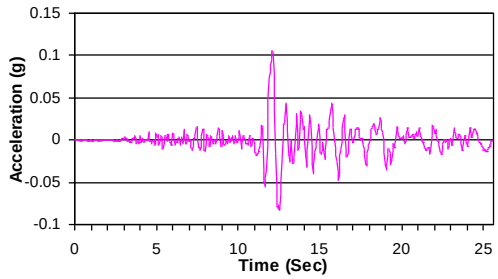

(d)

Figure 7. Testing of the GRNN for new distance (E-W component of event 25 at station I01); Simulated for distance of (a) 300 m, (b) 500 m, (c) 1000 m and (d) 1500 m

IV. CONCLUSION

Spatial variation of seismic ground motion is an important characteristic of earthquakes should be considered in dynamic analysis of large structures such as dams and bridges. To investigate the effect of this phenomenon on the seismic response of such structures, the spatially varying effect of earthquakes can be modeled by some proposed complicated models which exist in the literature. In this study, a simplified ANN based method was proposed to generate spatially varying earthquake accelerograms. Such accelograms can be employed in time history dynamic analysis of the structures subjected to multiple support excitations. Two neural networks were developed. A feed-forward back propagation neural network with hierarchal architecture was used to replicate its input vector into output vector. This pre-processing neural network was utilized to reduce the size of accelerogram vectors and enhance the efficiency of main neural network. The main generalized regression neural network was used to generate accelerograms from pseudo velocity spectra. The results can be summarized as the follows.

1. Compressing of accelerogram vectors reduced the dimension of the GRNN, thus learning of the GRNN for training data set improved.

2. Preliminary investigation on feed-forward back propagation neural network and GRNN showed that the GRNN is more efficient in training time and learning of the data than feed-forward back propagation neural network.

3. Spatial variation of ground motion can be modeled by using SMART-1 array earthquakes recorded at various points of the array as training data for the neural network.

4. Testing of the GRNN for new data set and distance shows that the developing neural network has good generalization results.

5. Spatial variation of ground motion can be seen in the simulated accelerograms. By increasing distance, acceleration values in the accelerograms tend to decrease and a time shifting of peak acceleration is observed.

ACKNOWLEDGMENT

We would like to thank University of Tabriz for supporting this work under the Research Grant Contract.

REFERENCES

[1] Harichandran, RS, And Wang, W. (1988), Response of a simple beam to a spatially varying earthquake excitation. Journal of Engineering Mechanics,. *ASCE* 114(9), pp 1526-1541.

[2] Zerva, A. Zervas, V. (2002), Spatial variation of seismic ground motions: An overview. Applied Mechanics Reviews, 55(3), pp 271-297.

[3] Harichandran, R.S., And Vanmark, E. (1986), Stochastic variation of earthquake ground motion in space and time. Journal of Engineering Mechanics, ASCE 112, pp 154-174.

[4] Perotti, F. (1990), Structural response to non-stationary multiple-support random excitation. Earthquake Engineering & Structural Dynamics. 19, pp 513-527.

[5] Nazmy, A.S., Abdel-Ghaffar, A.M. (1992), Effects of ground motion spatial variability on the response of cable-stayed bridges. Earthquake Engineering & Structural Dynamics. 21, pp 1-20.

[6] Der Kiureghian, A, and Neuenhofer, A. (1992), Response spectrum method for multiple-support seismic excitation. Earthquake Engineering & Structural Dynamics. 21, pp 712-740.

[7] Kahan, M, Gibert, R.J., Bard, P.Y. (1996), Influence of seismic waves spatial variability on bridges: a sensitivity analysis. Earthquake Engineering & Structural Dynamics. 25, pp 795-814.

[8] Maheri, M.R. and Ghaffarzadeh, H. (1992), Asynchronous and non-uniform support excitation analysis of large structures. J. of Seismology and Earthquake Engineering. *JSEE* 4(2&3), pp 63-74.

[9] Shinozuka, M. (1972), Monte Carlo solution of structural dynamics. Computers and Structures, 2**,** pp 855-874.

[10] Yang, J.N. (1972), Simulations of random envelope processes. Journal of Sound & Vibration. 25, pp 73-85.

[11] Shinozuka, M. (1987), Stochastic fields and their digital simulation, Stochastic Methods in Structural Dynamics. Martinus Nijhoff, Dordrecht, The Netherlands.

[12] Zerva, A. (1992), Seismic ground motion simulations from a class of spatial variability models. Earthquake Engineering & Structural Dynamics, 21, pp 351-361.

[13] Kawakami, H. and Sharma, S. (1999), Statistical study of spatial variation of response spectrum using free field records of dense strong ground motion arrays. Earthquake Engineering & Structural Dynamics. 28, pp 1273-1294.

[14] Shama, A. (2007), Simplified procedure for simulating spatially correlated earthquake ground motions. Engineering Structures, 29, pp 248-258.

[15] Ghaboussi, J, Lin. C-C.J. (1998), New method of generating spectrum compatible accelerograms using neural networks. Earthquake Engineering & Structural Dynamics. 27, pp 377–396.

[16] Lee, S.C. and Han, S.W. (2002), Neural-network-based models for generating artificial earthquakes and response spectra. Computers and Structures 80, pp 1627–1638.

[17] Haykin, S. (1994), Neural networks: a comprehensive foundation. Engelwood Cliffs, NJ: Prentice-Hall International, Inc.

[18] Specht, D.F. (1991), A general regression neural network. *IEEE Trans Neural Netw* 2(6), pp 568–576.

Hosein Ghaffarzadeh received his PhD in Structural Engineering 2005 from Shiraz University, Iran. His research interests are Structural Dynamics, Structural Control and Damage detection. He is currently an associate professor in the Department of Civil Engineering at the University of Tabriz, Tabriz, Iran.